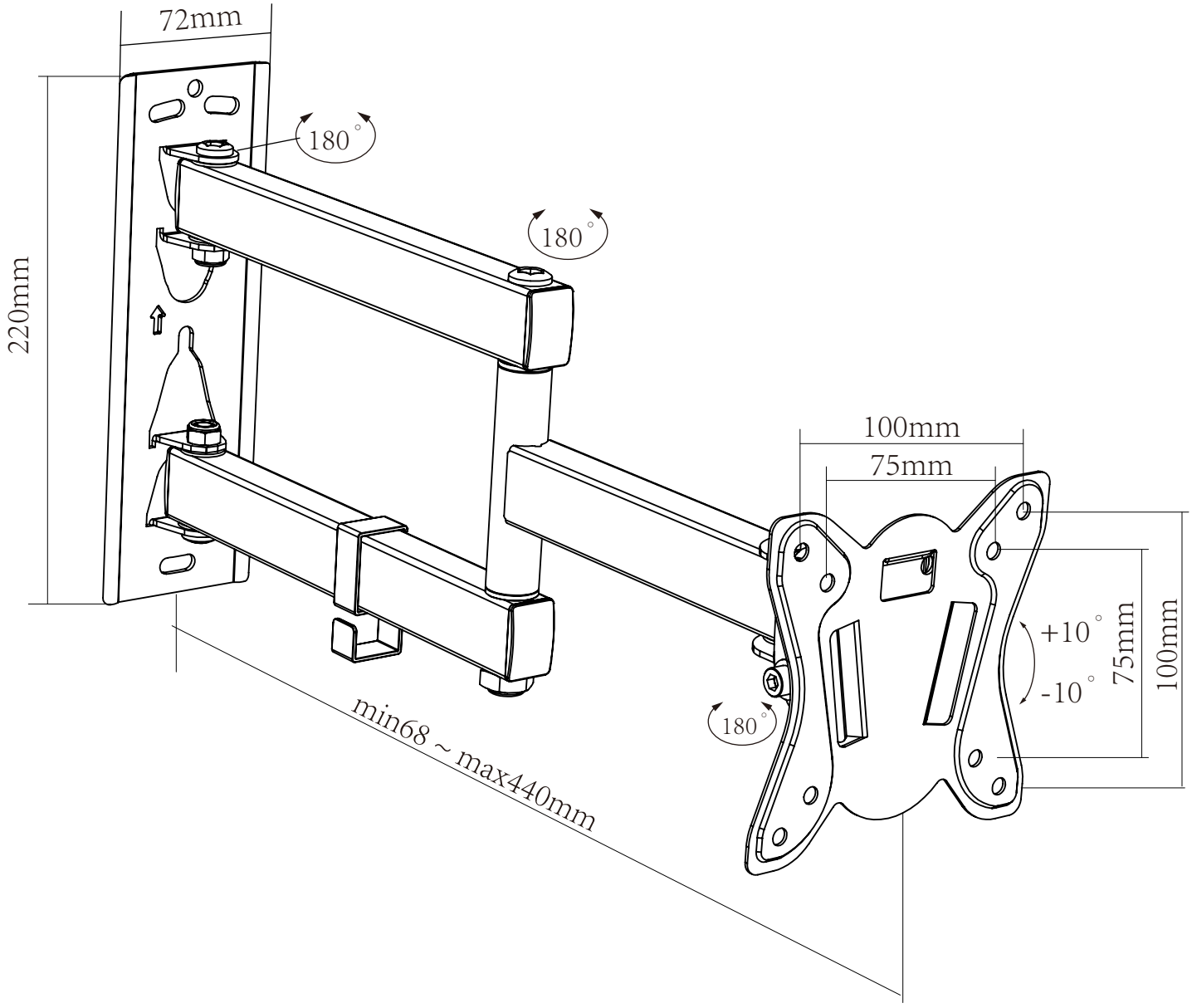
72mm
220mm
180°
180°
180°
100mm
75mm
+10°
-10°
75mm
100mm
min68 ~ max440mm